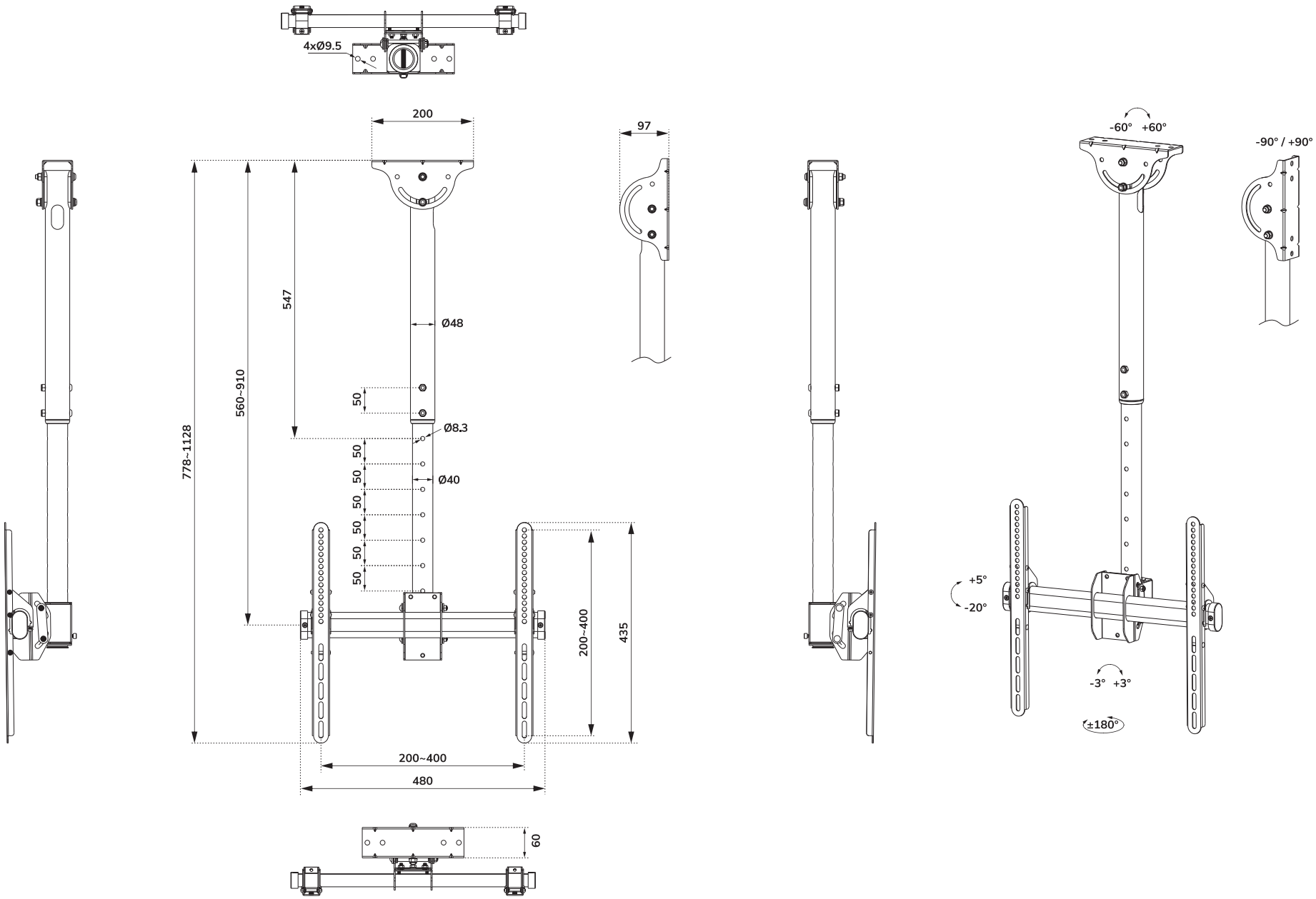

Measuring unit: mm

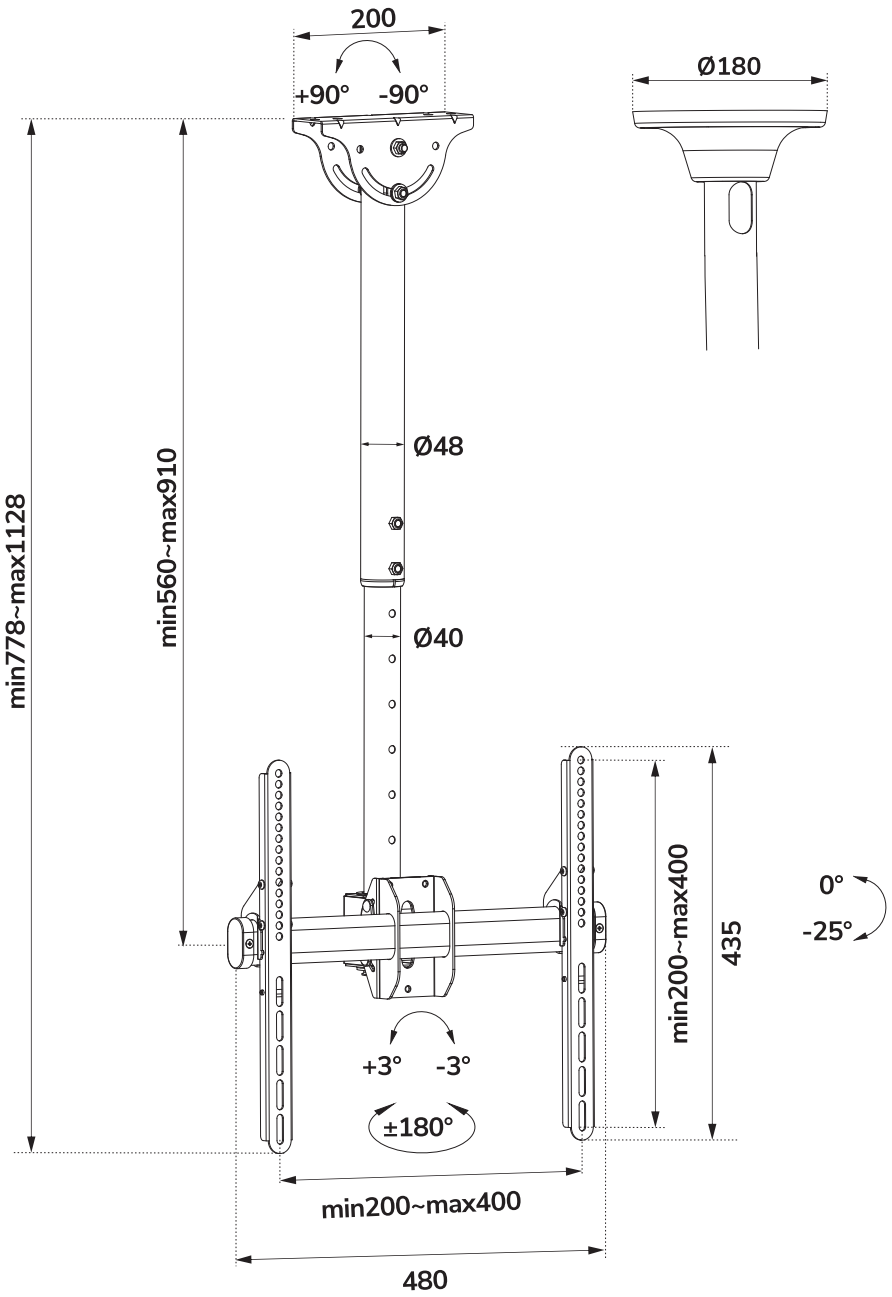

Measuring unit: mm